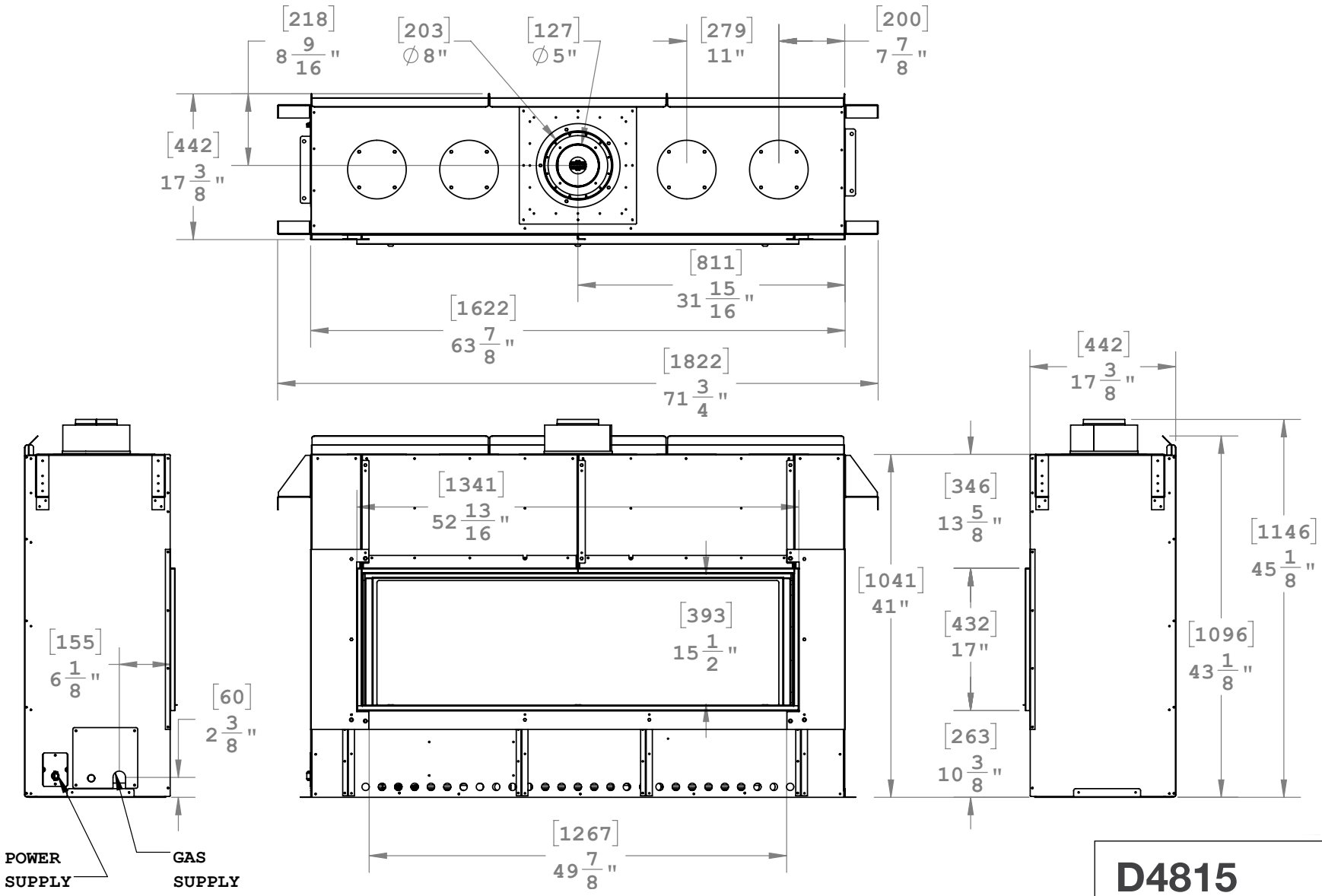

D4815

Distinction Single Sided

UNLESS OTHERWISE SPECIFIED	DATE
DIMENSIONS ARE IN INCHES TOLERANCES: FRACTIONAL ± 1/8"	02/16/2021

MONTIGO®
the art of fireplaces
www.montigo.com

THE INFORMATION CONTAINED IN THIS DRAWING IS THE SOLE PROPERTY OF CANADIAN HEATING PRODUCTS. ANY REPRODUCTION IN PART OR AS A WHOLE WITHOUT THE WRITTEN PERMISSION OF CANADIAN HEATING PRODUCTS IS PROHIBITED